BELLOWS & BOOTS 15

Dipped Bellows - Standard Designs 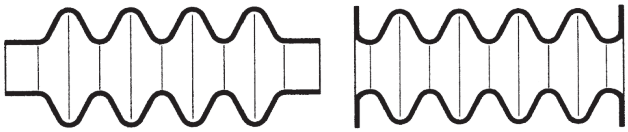 Pg. 80

Rubber Boots & Bellows 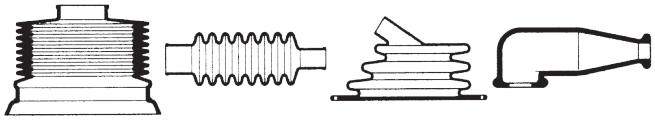 Pg. 81

Air Intake Elbows 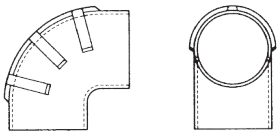 Pg. 93

Rubber Scupper Lips Pg. 94

Rubberized Fabric Boots 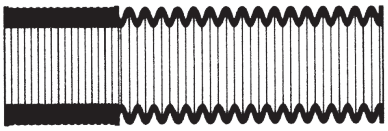 Pg. 96

DIPPED BELLOWS— STANDARD DESIGNS

LONGWOOD

ILLUSTRATIONS BELOW NOT TO SCALE

The following designs are standard. If you require a custom design, fax or mail your drawing to Longwood. Longwood can produce quality parts utilizing high grade **liquid latex, neoprene,** and **polyvinyl choloride (PVC).** These raw materials are compounded to meet customer specifications and to resist environmental conditions such as oil, low and high temperatures, water, dust, dirt, and ozone.

Standard Designs

15-A

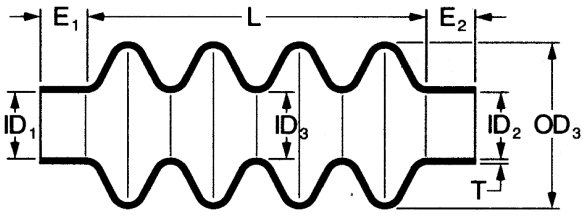

15-B

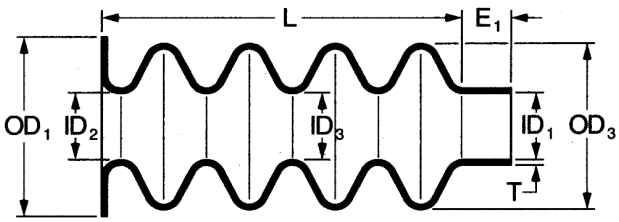

15-C

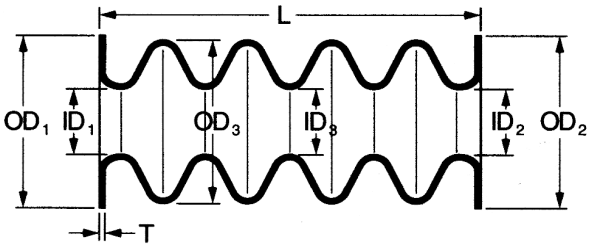

15-D

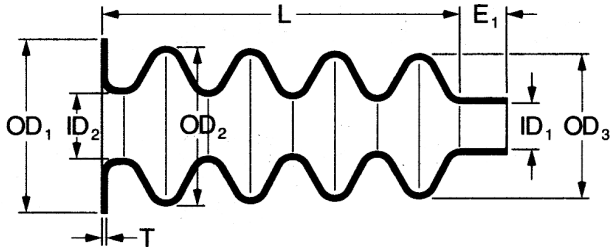

15-E

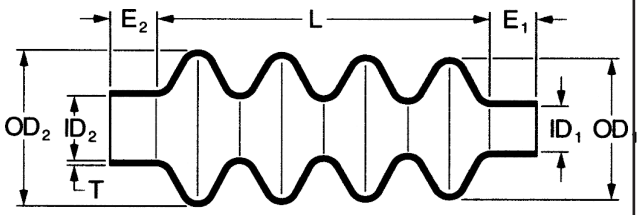

15-F

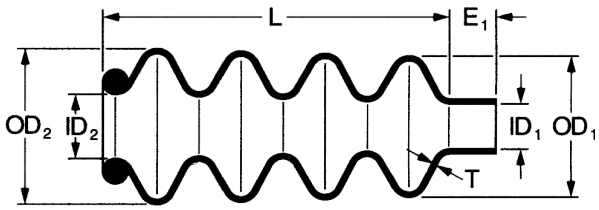

ILLUSTRATIONS BELOW NOT TO SCALE

15-5376R

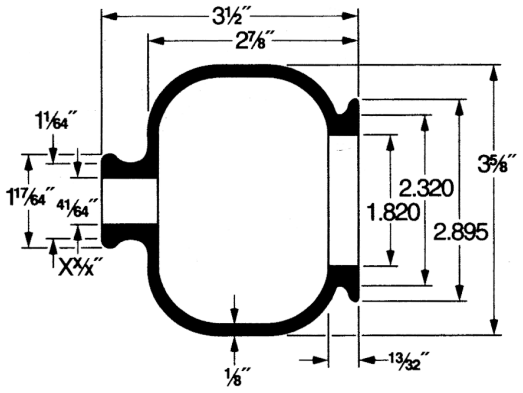

15-2999R

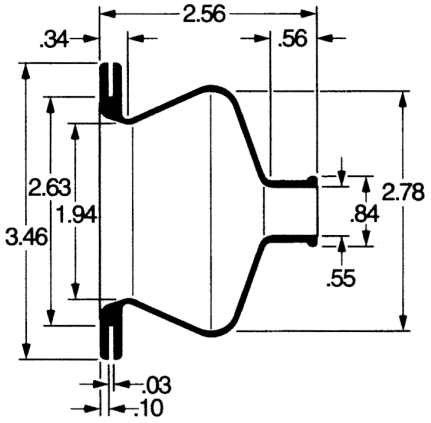

15-5069R

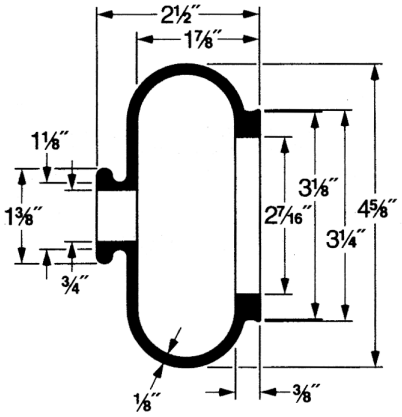

15-4049R

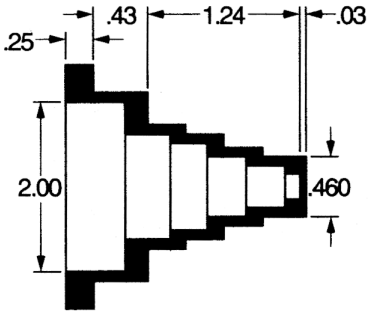

15-1970R

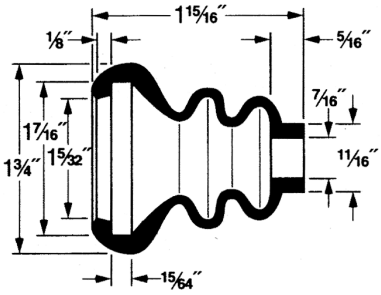

15-466R

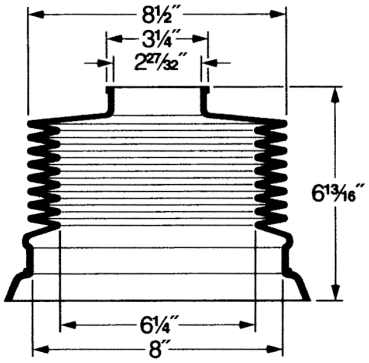

RUBBER BOOTS & BELLOWS

LONGWOOD

ILLUSTRATIONS BELOW NOT TO SCALE

15-106

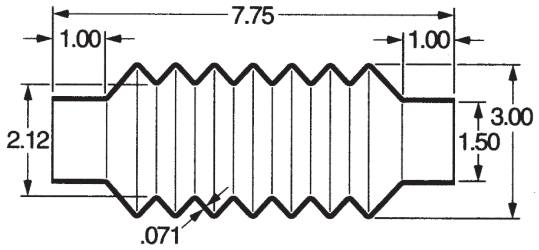

15-107

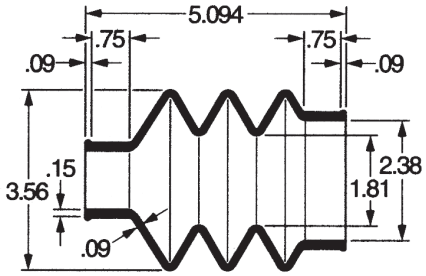

15-108

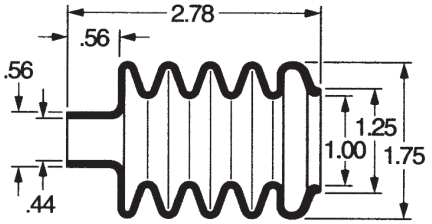

15-5747R

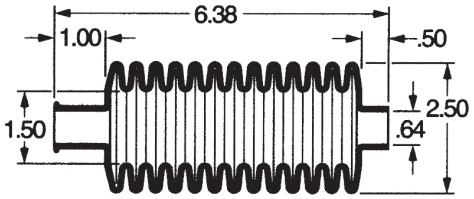

15-3842R

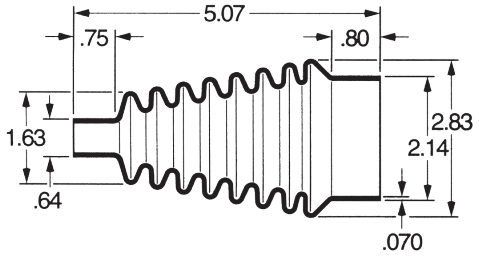

15-4085R

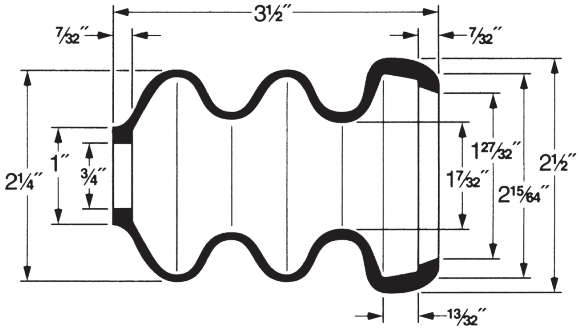

ILLUSTRATIONS BELOW NOT TO SCALE

15-1532R

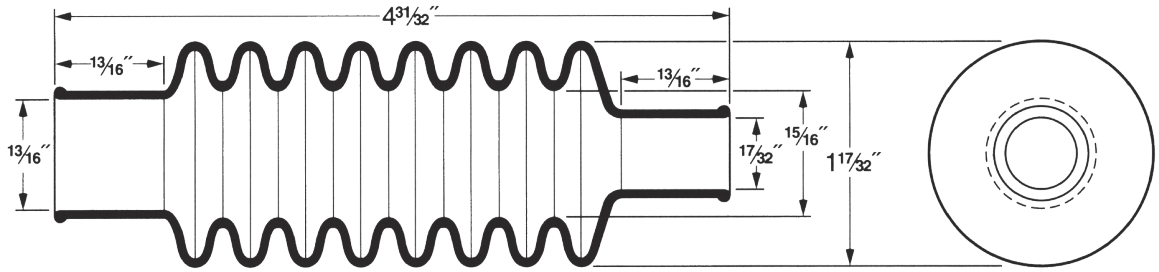

15-456R

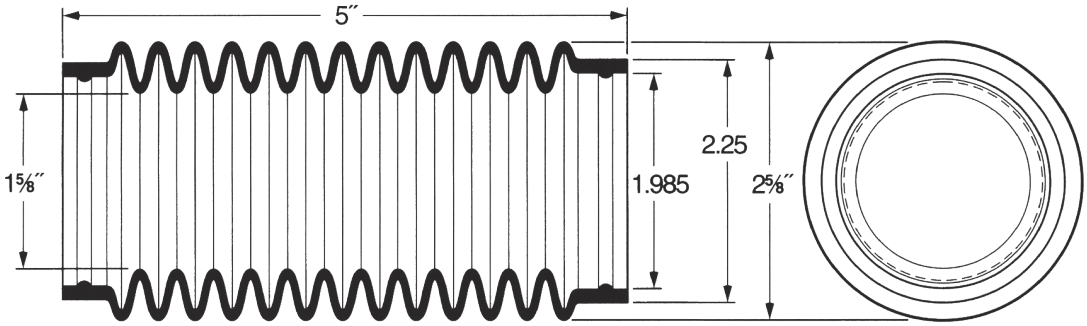

15-3593R

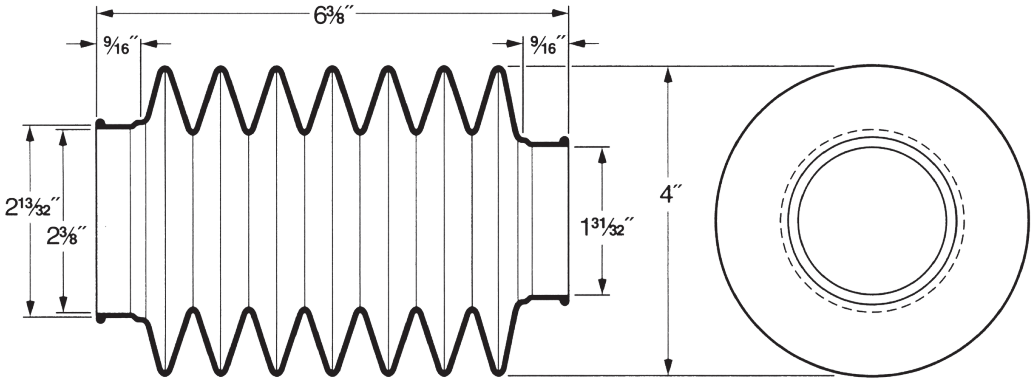

RUBBER BOOTS & BELLOWS

LONGWOOD

ILLUSTRATIONS BELOW NOT TO SCALE

15-6665R

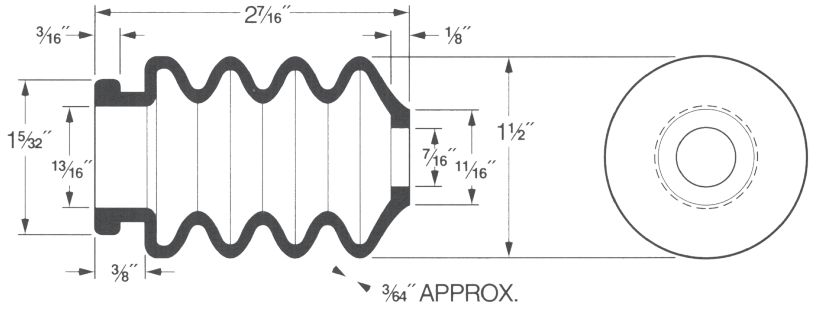

15-4626R

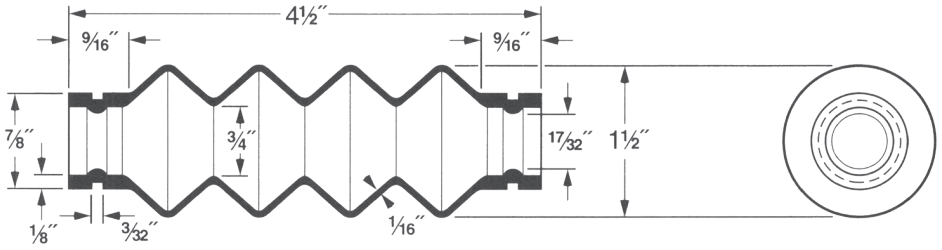

15-1153R

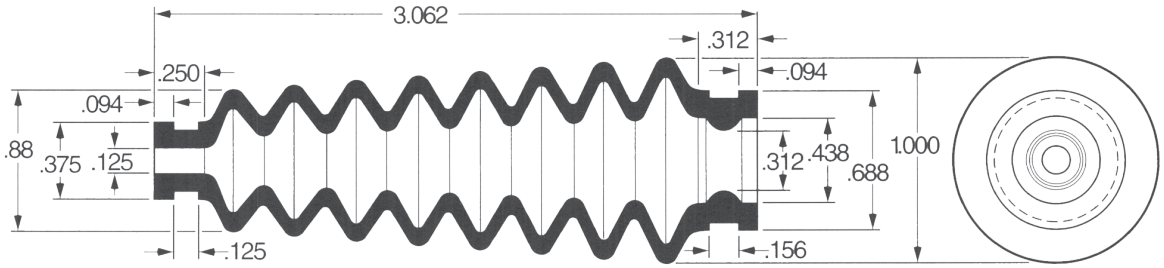

15-1551R

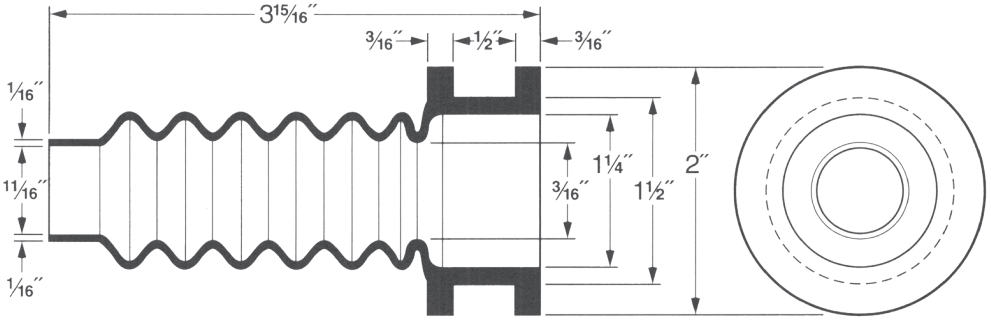

ILLUSTRATIONS BELOW NOT TO SCALE

15-100

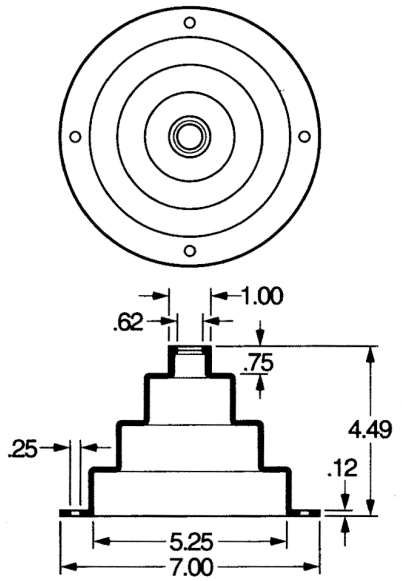

15-101

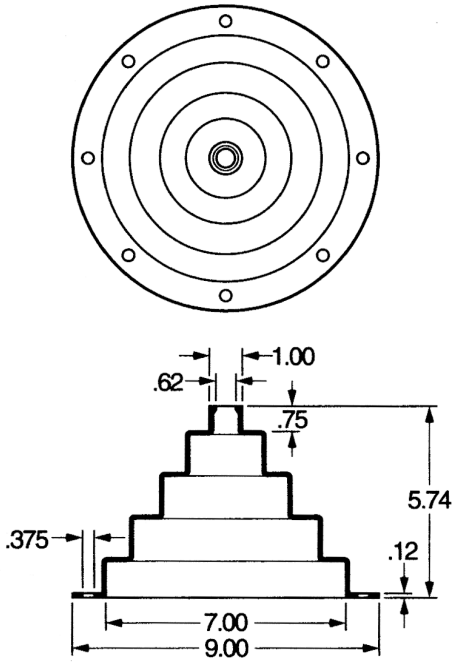

15-102

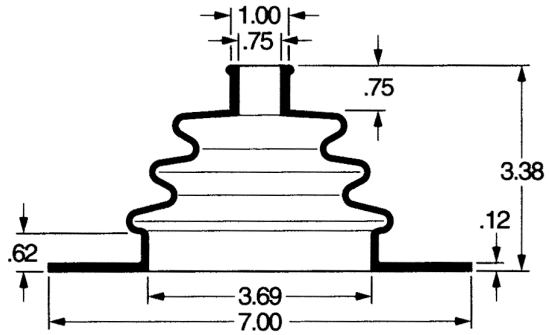

15-103

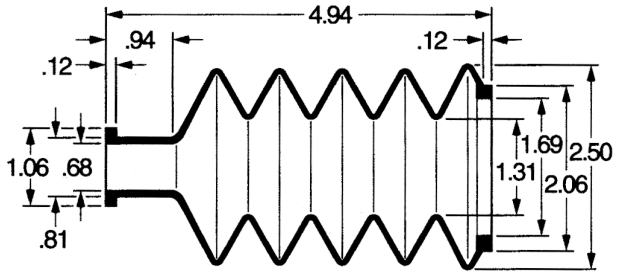

15-104

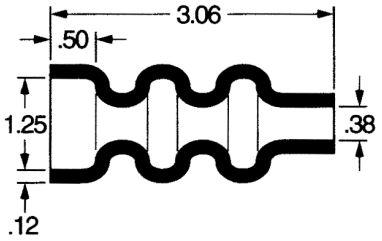

15-105

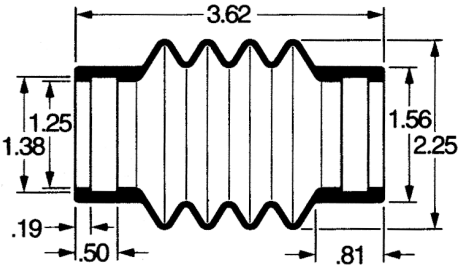

RUBBER BOOTS & BELLOWS

LONGWOOD

ILLUSTRATIONS BELOW NOT TO SCALE

15-2173R
Shifter Boot

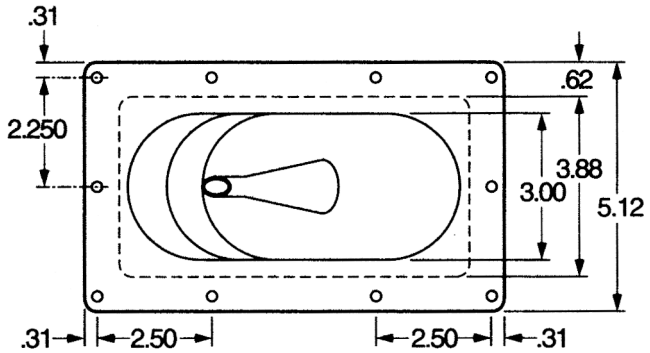

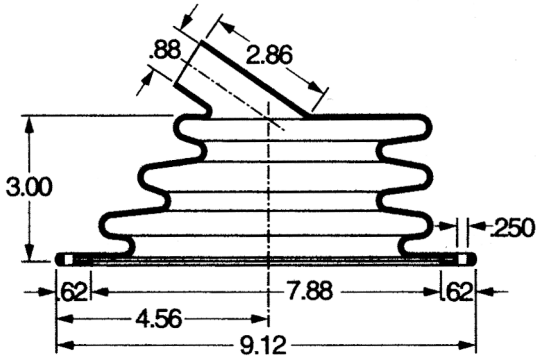

15-2250R
Shifter Boot

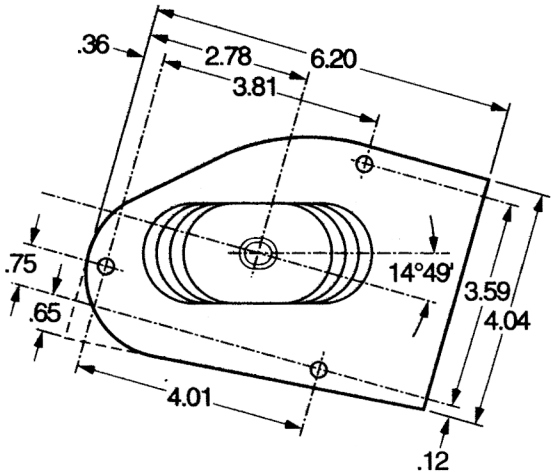

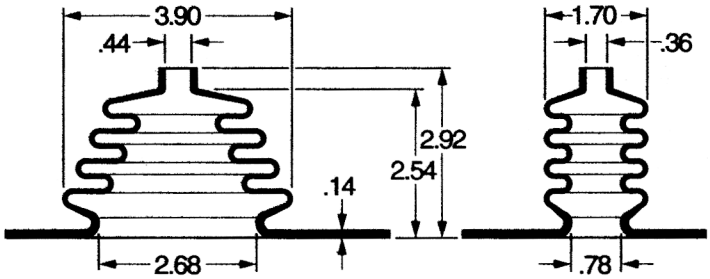

ILLUSTRATIONS BELOW NOT TO SCALE

15-740R

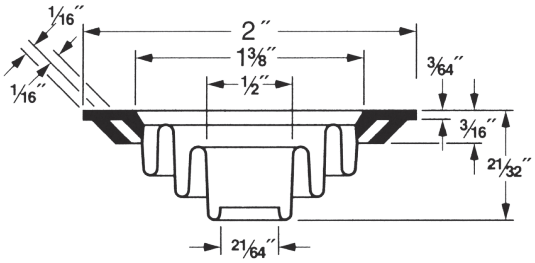

15-747R

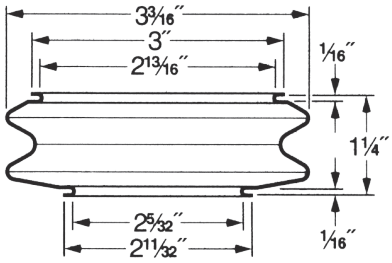

15-5648R

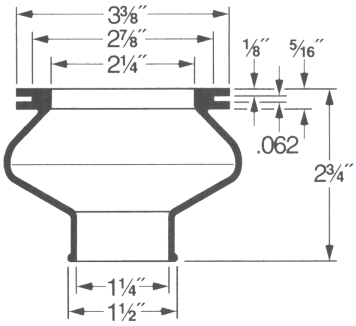

15-365R

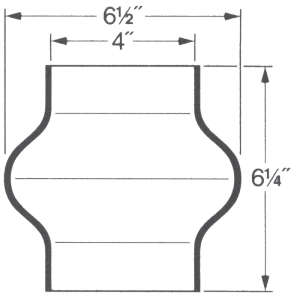

15-422R

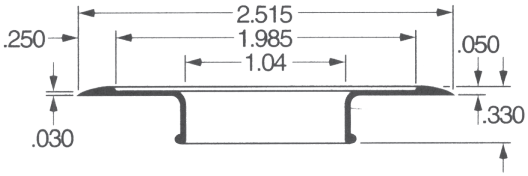

15-6814R

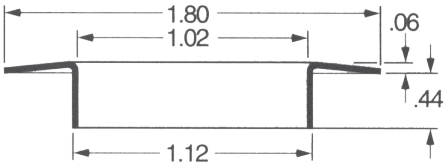

RUBBER BOOTS & BELLOWS

LONGWOOD

ILLUSTRATIONS BELOW NOT TO SCALE

Electric Terminal Nipples MS25171 (Series)

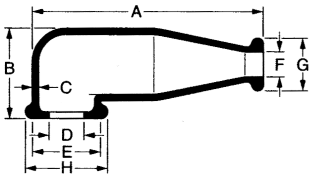

Electric Terminal Nipples

MS #	Part #	A Max.	B ±.125	C ±.005	D Dia.	E Dia.	F Dia.	G Dia	H Dia.
MS25171-1	15-1	1.38	.56	.06	.40	.63	.16	.41	.76
MS25171-1S	15-1S	1.38	.56	.06	.40	.63	.16	.41	.76
MS25171-2	15-2	2.50	1.0	.06	.56	.82	.31	.56	.95
MS25171-2S	15-2S	2.50	1.00	.06	.56	.82	.31	.56	.95
MS25171-3	15-3	2.50	1.00	.06	.56	.82	.43	.68	.95
MS25171-3S	15-3S	2.50	1.00	.06	.56	.82	.43	.68	.95
MS25171-4	15-4	2.50	1.00	.06	.56	.82	.56	.82	.95
MS25171-4S	15-4S	2.50	1.00	.06	.56	.82	.56	.82	.95

Note: The letter “S” after a number designates MIL-R-5847, silicone. The plain numbers are MIL-R-6855, synthetic rubber.

15-2392R

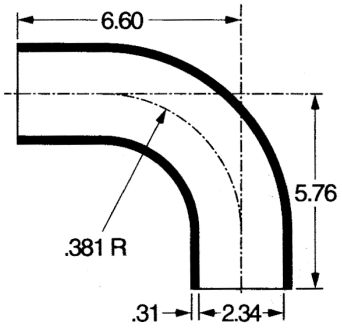

15-2128R

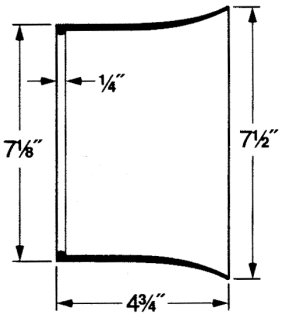

15-60

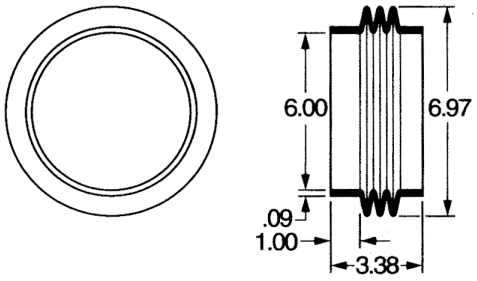

15-70

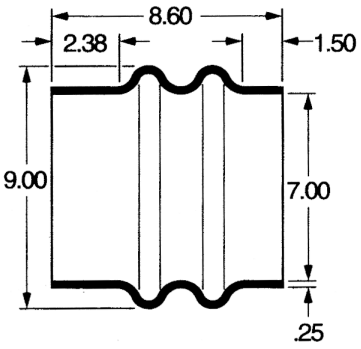

Longwood can custom-mold boots and bellows to your specifications

ILLUSTRATIONS BELOW NOT TO SCALE

15-20R

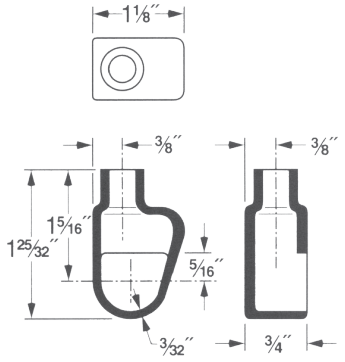

15-270R

Electrical Nipple

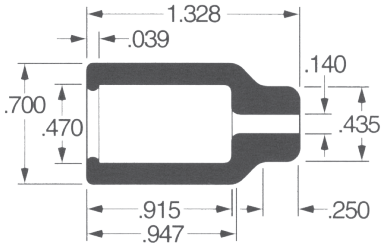

NSN 5935-00-572-9180
361 Cavity Mold

15-4423R

Electrical Nipple

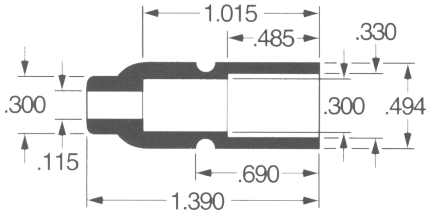

NSN 5975-00-660-5962
169 Cavity Mold

15-3651R

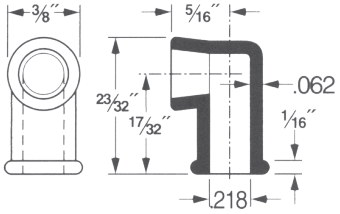

15-5982R

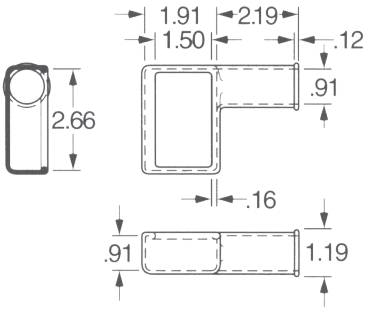

15-1998R

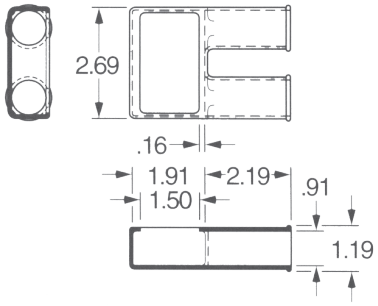

15-4724R

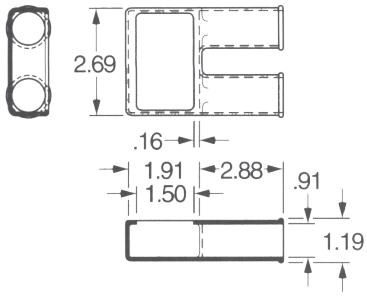

15-1744R

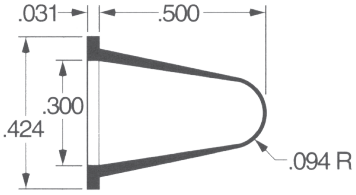

15-611R

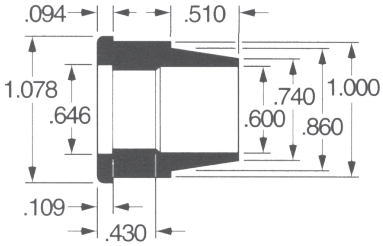

RUBBER BOOTS & BELLOWS

LONGWOOD

ILLUSTRATIONS BELOW NOT TO SCALE

15-1485R

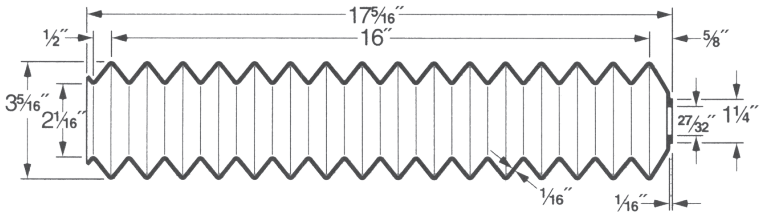

15-3346R

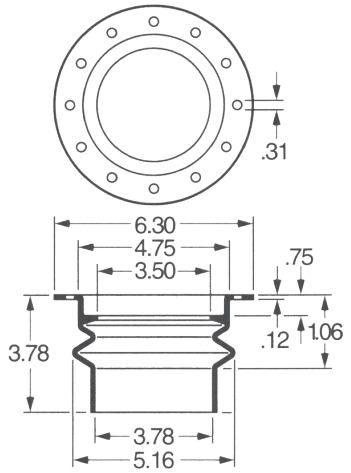

15-618R

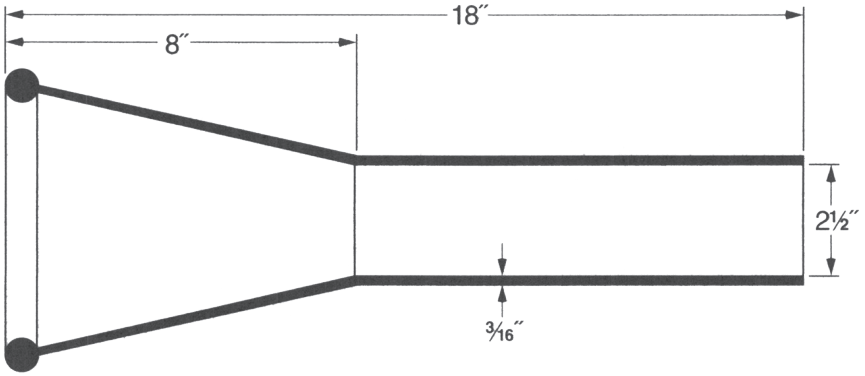

15-6637R

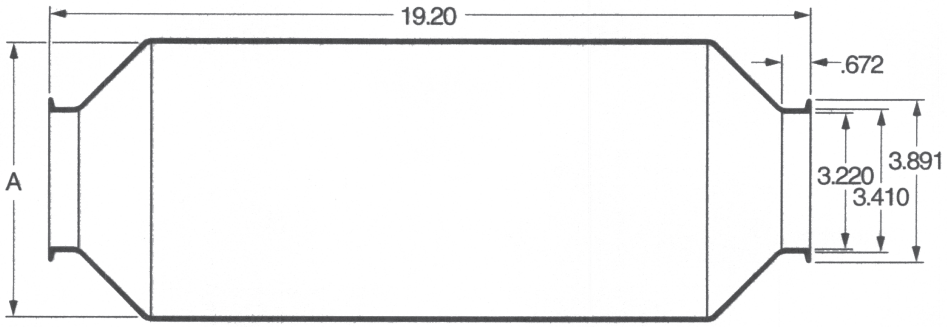

ILLUSTRATIONS BELOW NOT TO SCALE

15-671R

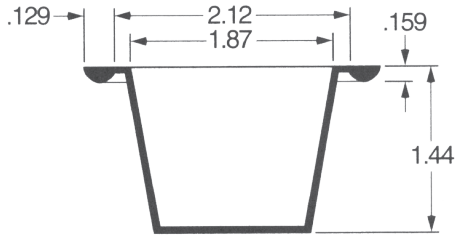

15-474R

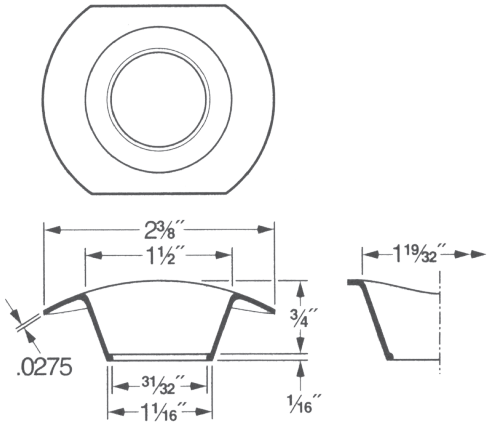

15-1267R

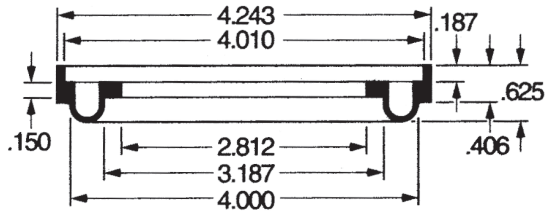

15-1173R

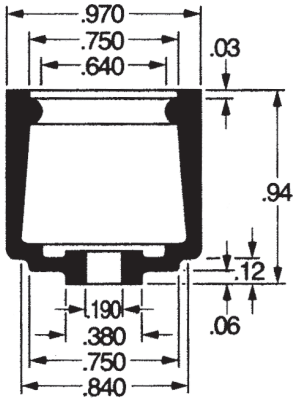

15-4201R

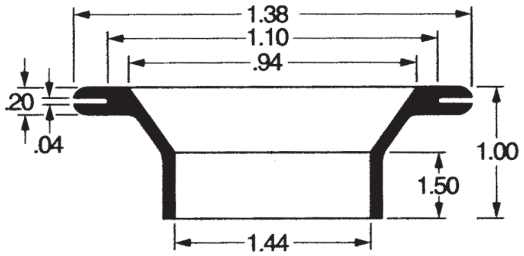

15-715R

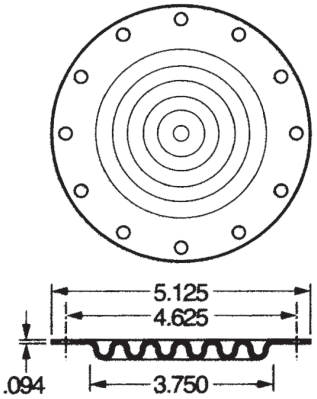

RUBBER BOOTS & BELLOWS

LONGWOOD

ILLUSTRATIONS BELOW NOT TO SCALE

15-1947R

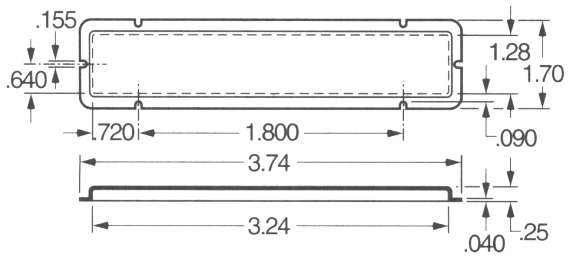

15-425R

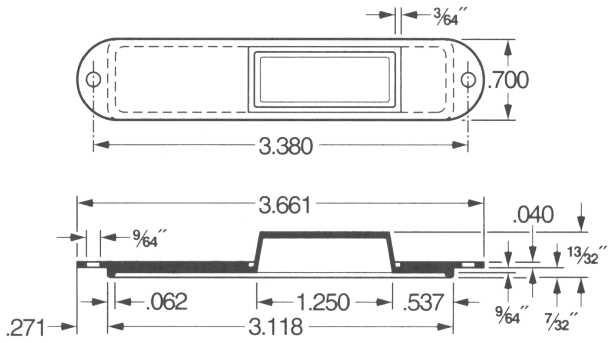

15-1369R

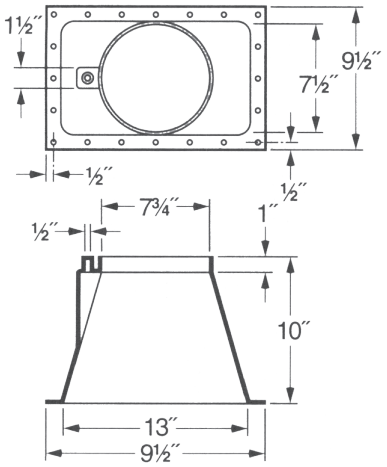

15-130R

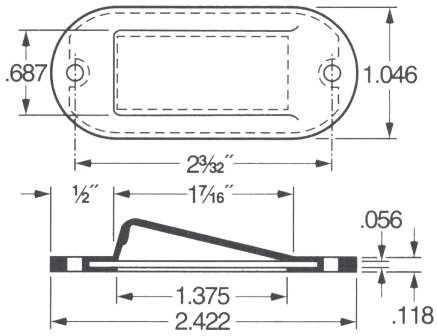

15-3954R

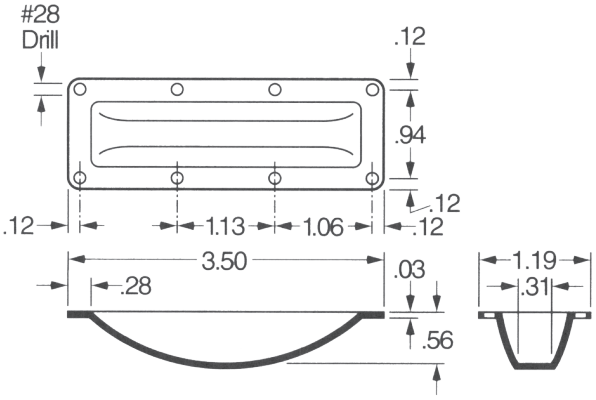

15-6104R

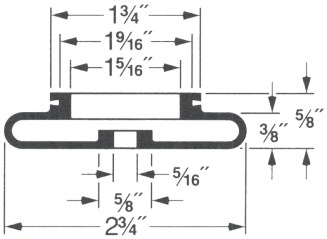

ILLUSTRATIONS BELOW NOT TO SCALE

AIR INTAKE ELBOWS

All sizes 5 ½″ and over are either ribbed or compounded for maximum resistance to internal vacuum. “A,” “B,” “C,” and “D” dimensions may be altered as necessary to suit your requirements.

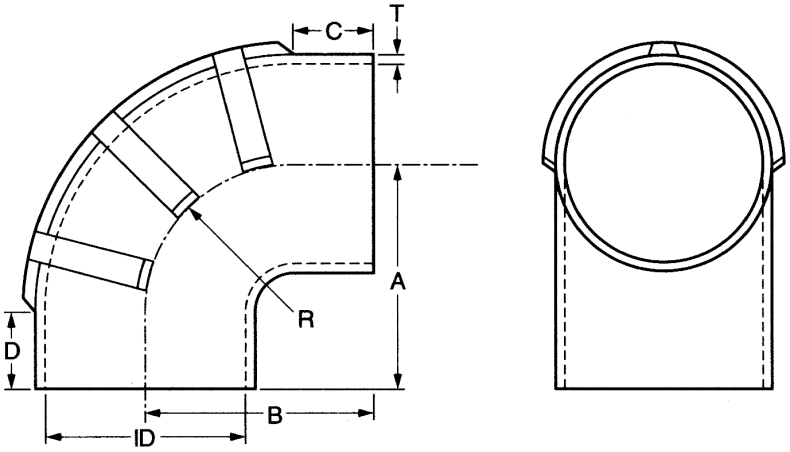

Air Intake Elbows							
Part #	Size ID	A	B	C	D	R	T
15-7000	2	3.50	3.50	1.50	1.50	2.00	.22
15-7001	2 ¼	3.75	3.75	1.50	1.50	2.25	.22
15-7002	2 ½	4.00	4.00	1.50	1.50	2.50	.25
15-7003	3	4.75	4.75	2.00	2.00	2.75	.25
15-7004	3 ½	5.50	5.50	1.50	1.50	4.00	.25
15-7005	4	5.75	5.75	2.75	2.75	3.00	.25
15-7006	4 ½	5.50	5.50	2.00	2.00	3.50	.25
15-7007	5	5.75	5.75	2.00	2.00	3.75	.25
15-7008	5 ½	6.50	6.50	1.75	1.75	4.75	.25
15-7009	6	6.75	6.75	1.75	1.75	5.00	.25
15-7010	7	7.56	7.56	2.00	2.00	5.56	.31
15-1011	8	8.50	8.50	2.00	2.00	6.50	.37
15-7012	10	10.50	10.50	2.00	2.00	8.50	.37

Longwood can custom-mold elbows to your specifications!
Call 1-800-829-7231 — or — Fax drawings to 336-272-5619

RUBBER SCUPPER LIPS

LONGWOOD

ILLUSTRATIONS BELOW NOT TO SCALE

Scupper Lips					
Part #	**Flange OD**	**Hole ID**	**NSN**	**Navy Mold**	**Comments**
15-1380R	6 ½	2 ⅛	*2040-00-371-8008	3570	
15-673R	8	3 ¼	*2040-00-371-8010	3571	Short neck
15-6035R	8	3 ¼	*2040-00-371-8011	3576	Long neck
15-1131R	9	4 ¼	*2040-00-371-8012	3572	Short neck
15-1094R	*	*	*2040-00-963-6900	1376-A	Water tri-extension
15-1240R	9	4 ¼	**2040-00-371-8013	3577	Long neck
15-1489R	10	5 ¼	**2040-00-371-8014	3573	Short neck
15-5752R	10	5 ¼	**2040-00-371-8015	3578	Long neck
15-3379R	11	6 ½	***2040-00-371-8017	3574	Short neck
15-618R	18 long	5 - 2 ½	**5975-605-7702-(72)		Funnel type
15-4369R	6 ½	*	***2040-00-371-8009	3575	Long neck
15-4610R	*	*	Tri-scupper modified	15 x 18 x 11	Tri-scupper modified

15-1380R

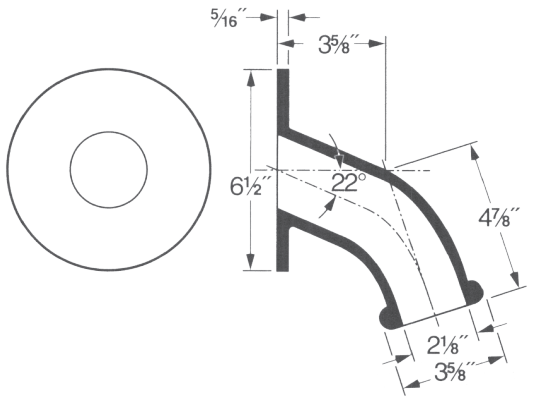

15-673R

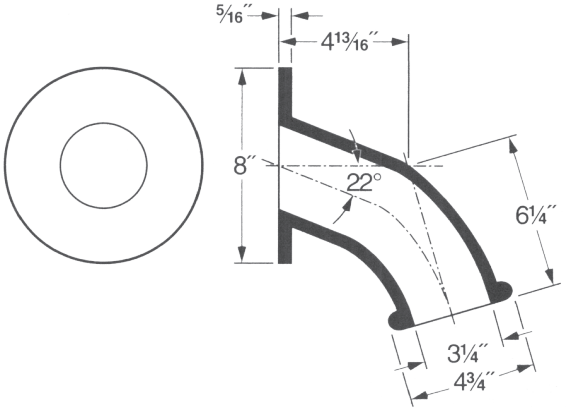

LONGWOOD

RUBBER SCUPPER LIPS

ILLUSTRATIONS BELOW NOT TO SCALE

15-6035R

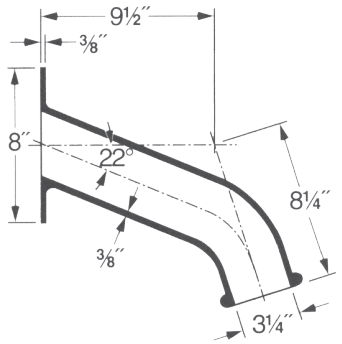

15-1131R

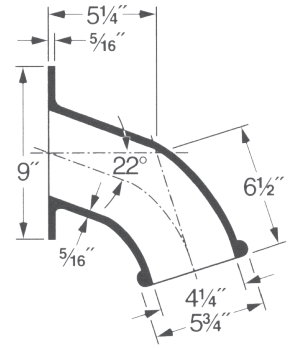

15-1094R

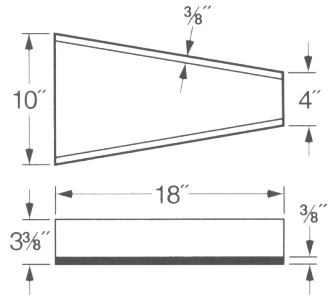

15-1240R

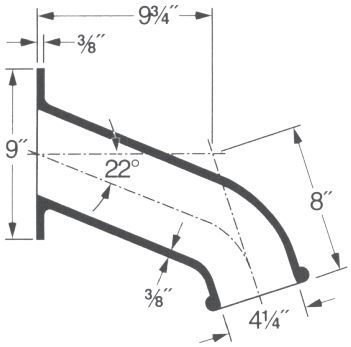

15-1489R

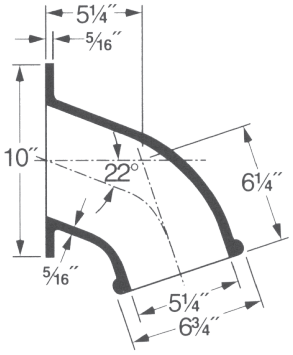

15-5752R

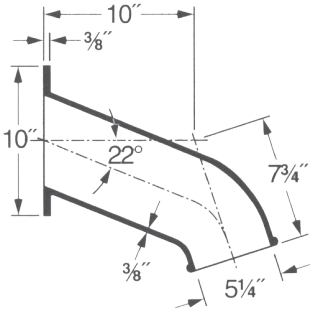

15-3379R

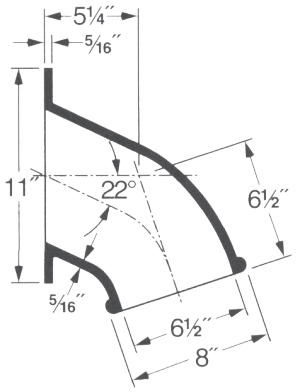

Longwood can custom-mold products to your specifications!

15-4369R

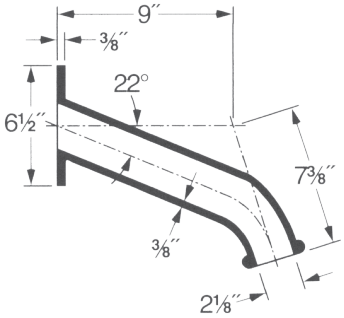

RUBBERIZED FABRIC BOOTS

LONGWOOD

ILLUSTRATIONS BELOW NOT TO SCALE

STOP ROD SCORING - PREVENT NICKING - EXTEND SEAL LIFE

Longwood rod boots provide maximum protection against cylinder rod scoring from chips, abrasive particles and other impinging objects. Rod boots are available in 12 stock sizes without tooling charges or minimum order quantities.

Manufactured of rugged neoprene-coated nylon fabric, Longwood rod boots give millions of trouble-free operations in temperature ranges of -45˚F to 200˚F.

Rubberized Fabric Boots

Part #	Inside Diameter	Outside Diameter	Retracted Length Every 12″ Extended	Collar ID Available
15-8000	¾	3	¾	½, ⅝
15-8001	1 ⅛	3 ⅛	¾	¾, ⅞, 1
15-8002	1 ½	3 ¾	¾	1 ⅛, 1 ¼, 1 ⅜
15-8003	1 ⅞	4 ⅛	¾	1 ½, 1 ¾
15-8004	2 ⅜	4 ⅝	¾	2, 2 ¼
15-8005	2 ⅞	5 ⅛	¾	2 ½, 2 ¾
15-8006	3 ⅜	7	½	3, 3 ¼
15-8007	3 ⅞	7 ½	½	3 ½, 3 ¾
15-8008	4 ½	8 ¼	½	4, 4 ¼
15-8009	5	8 ⅜	½	4 ½, 4 ¾
15-8010	5 ⅜	9 ½	½	5, 5 ½
15-8011	7 ¼	11	½	6, 6 ½, 7
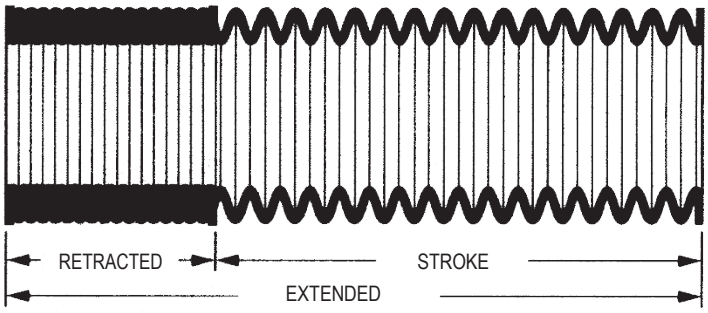
(Priced by 12″ lengths)